THIS DOCUMENT AND THE DATA DISCLOSED HEREIN OR HEREWITH IS NOT TO BE REPRODUCED, USED, OR DISCLOSED IN WHOLE OR IN PART TO ANYONE WITHOUT THE PERMISSION OF EICHENAUER, INC.

REVISIONS			
LTR/ND	DESCRIPTION	DATE	APPROVED
1	PRODUCTION RELEASE	4/15/09	SJH

NOTES:

1. DIMENSIONS IN INCHES
2. FLANGE MATERIAL: MILD STEEL
3. SHEATH MATERIAL: 1.4571
4. TERMINAL PINS: 10-32 WITH NUTS AND WASHERS AS SHOWN
5. COLD RESISTANCE 5.1Ω +10%/-5% PER TUBE (4.8 - 5.6)
6. COLD RESISTANCE 3.4Ω +10%/-5% BUSS TO BUSS (3.2 - 3.7)
7. TIGHTEN TOP NUTS TO 30 IN-LBS TORQUE
8. SHEATH WATT DENSITY: 88 W/IN²
9. UL FILE: E76225 MODEL: 2211

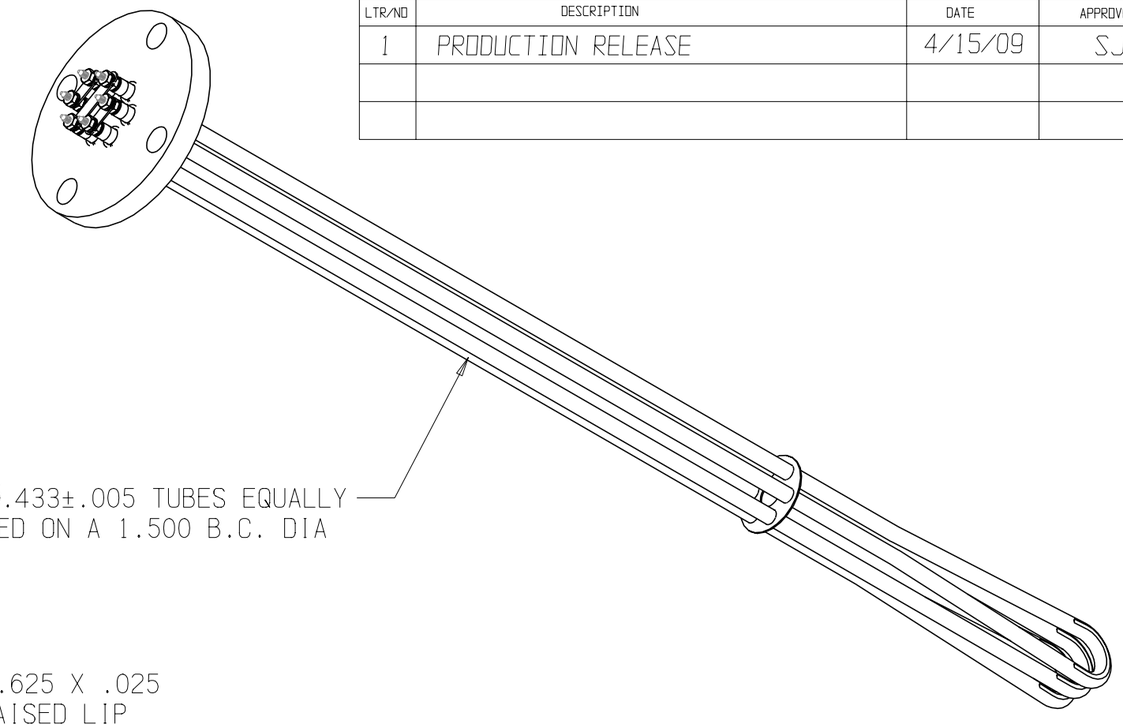

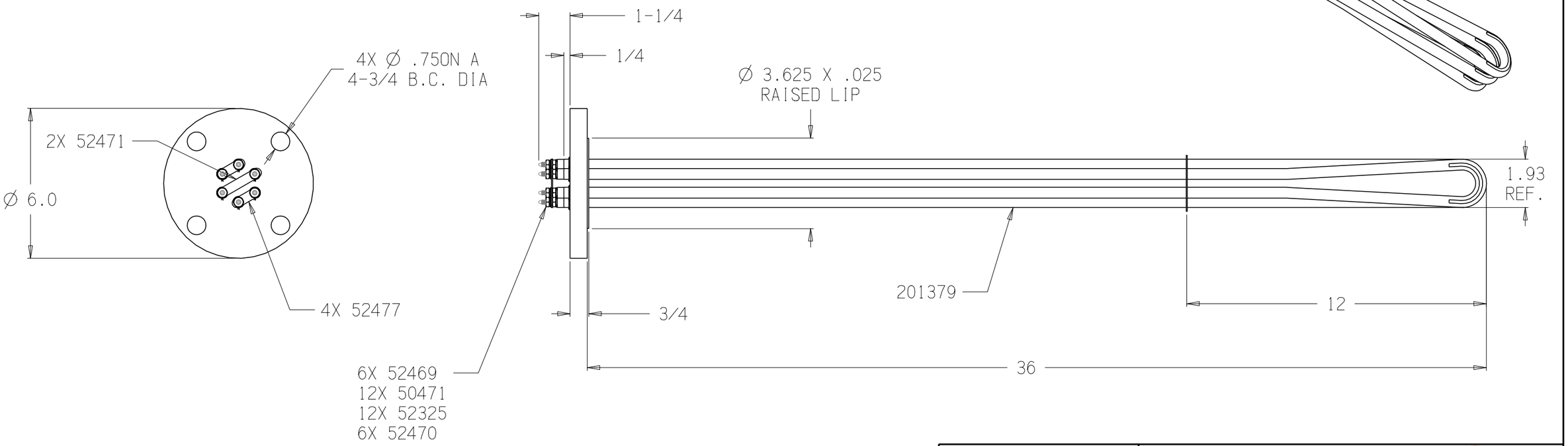

THIRD ANGLE PROJECTION

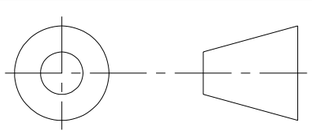

TOLERANCES UNLESS OTHERWISE SPECIFIED

DEC	FRACTIONS	ANGLES
.X ±.06		
.XX ±.025	±1/16	±1°
.XXX ±.010		

APPROVALS		DATE
DRAWN	S. HEBERT	4/15/09
CHECKED		

EICHENAUER INC.
292 Sunapee St., Newport, NH 03773
TEL: 603-863-1454 FAX: 603-863-1248

TITLE
FLANGED TUBULAR HEATER 208V 25KW 3PH

SIZE	FSCM NO.	DWG. NO.	REV.
B		300559H	1

SCALE 1:4 SHEET 1 of 1